Austrian Country Report

Johann Breidler, Christian Fink

AEE – Institut für Nachhaltige Technologien (AEE INTEC)
A-8200 Gleisdorf, Feldgasse 19
AUSTRIA

Existing Large Solar Thermal Systems in Austria

Bilderquelle: Austria Solar, 2011

All three projects:

- district heat supply
- were realised through a contracting models

National Subsidy for Large Solar Thermal Systems

Aim of the Subsidy:

- Developing of large solar thermal systems to a common heating system for industiral applications
- Increase the substitution of fossil energies and helps to reach the national action scheme (34% renewable energies till 2020)
- Possibility to increase the Know-how for the solar thermal branch
- Possibility for an active technology development
- Improving competitiveness on the global market for Austrian solar thermal companies

Subsidy programm consists two main connected parts:

- Subsidy of the investion
- Attendend scientifical research

National Subsidy for Large Solar Thermal Systems

Period of submission: four month, between spring and autumn

Applications:

- Solar process heating
- Solar district heating supply
- Hohe solar fractions (more than 20% of the whole heat demand) for service- and industry buildings
- Solar heating and cooling

Range of collector area: **100 to 2.000 m²**

Subsidy rate: **40%** (plus 5% for small and medium sized companies and plus 5% for very innovative concepts are possible)

Budget: 2010: **€ 2 Mio.** (ranking: „First come – First serve“)
2011: **€ 5 Mio.** (ranking: innovativ concepts first, after that „First come – First serve“)

National Subsidy for Large Solar Thermal Systems – Attendend Scientifical Research

Tasks:

- Consulting meetings with the responsible company before submissionlichtend (responsible for a successful submission)
- Supervision during the detailed planning phase and the realisation
- Construction of monitoring concepts
- Monitoring of one year minimum
- Analysation of the monitoring result and feedback to the operators/users
- Detection of important research points
- Distribution of the results to the Austrian Solar Thermal Technology Plattform

Team:

- AEE INTEC (coordinator)
- AIT - Austrian Institute of Technologie
- ASiC - Austrian Solar Innovation Center

Monitoring Concept (e.g. Solar Process Heating)

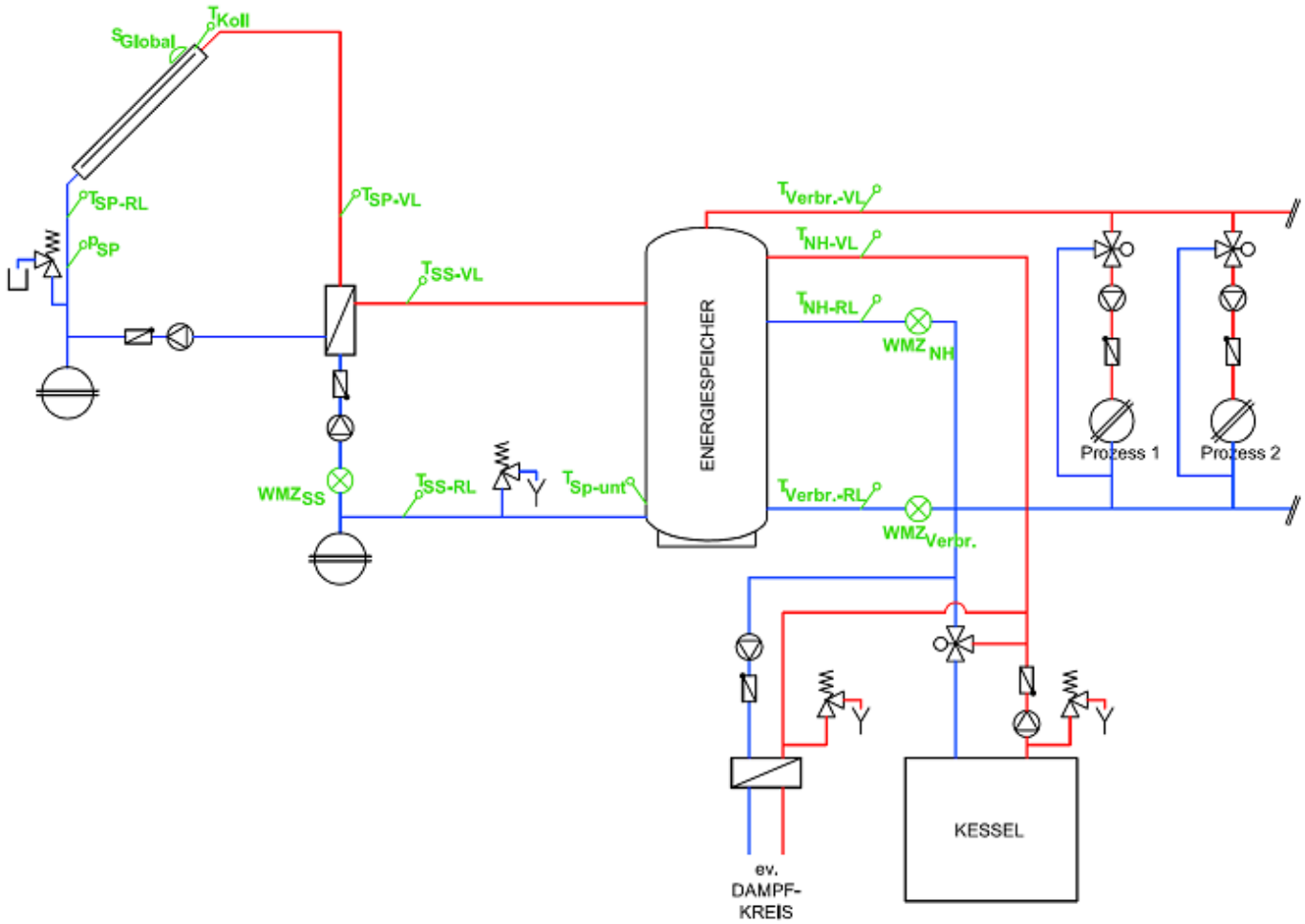

Subsidy Submissions 2010

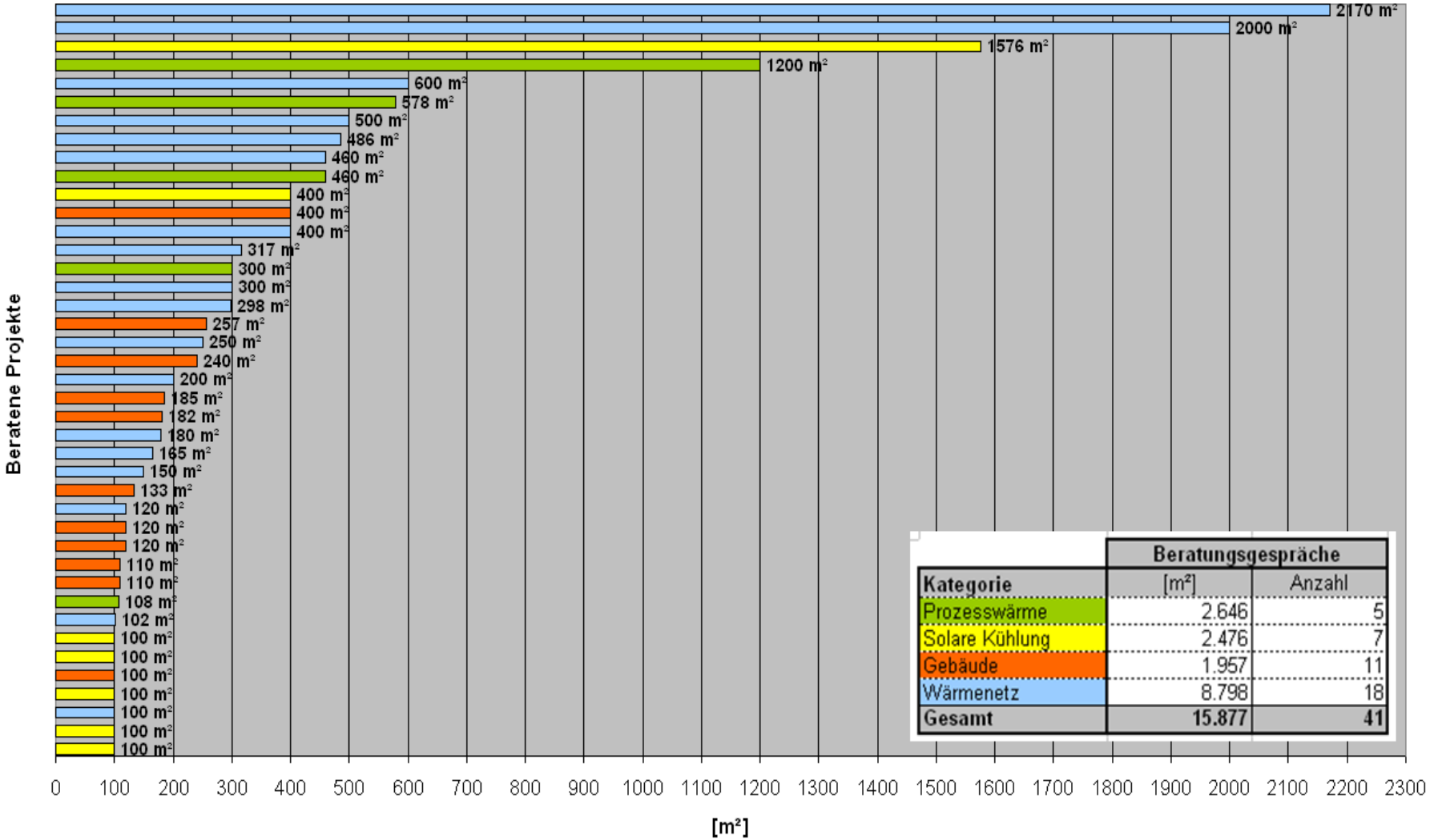

	Beratungsgespräche	
Kategorie	[m²]	Anzahl
Prozesswärme	2.646	5
Solare Kühlung	2.476	7
Gebäude	1.957	11
Wärmenetz	8.798	18
Gesamt	**15.877**	**41**

Subsidy Submissions 2011

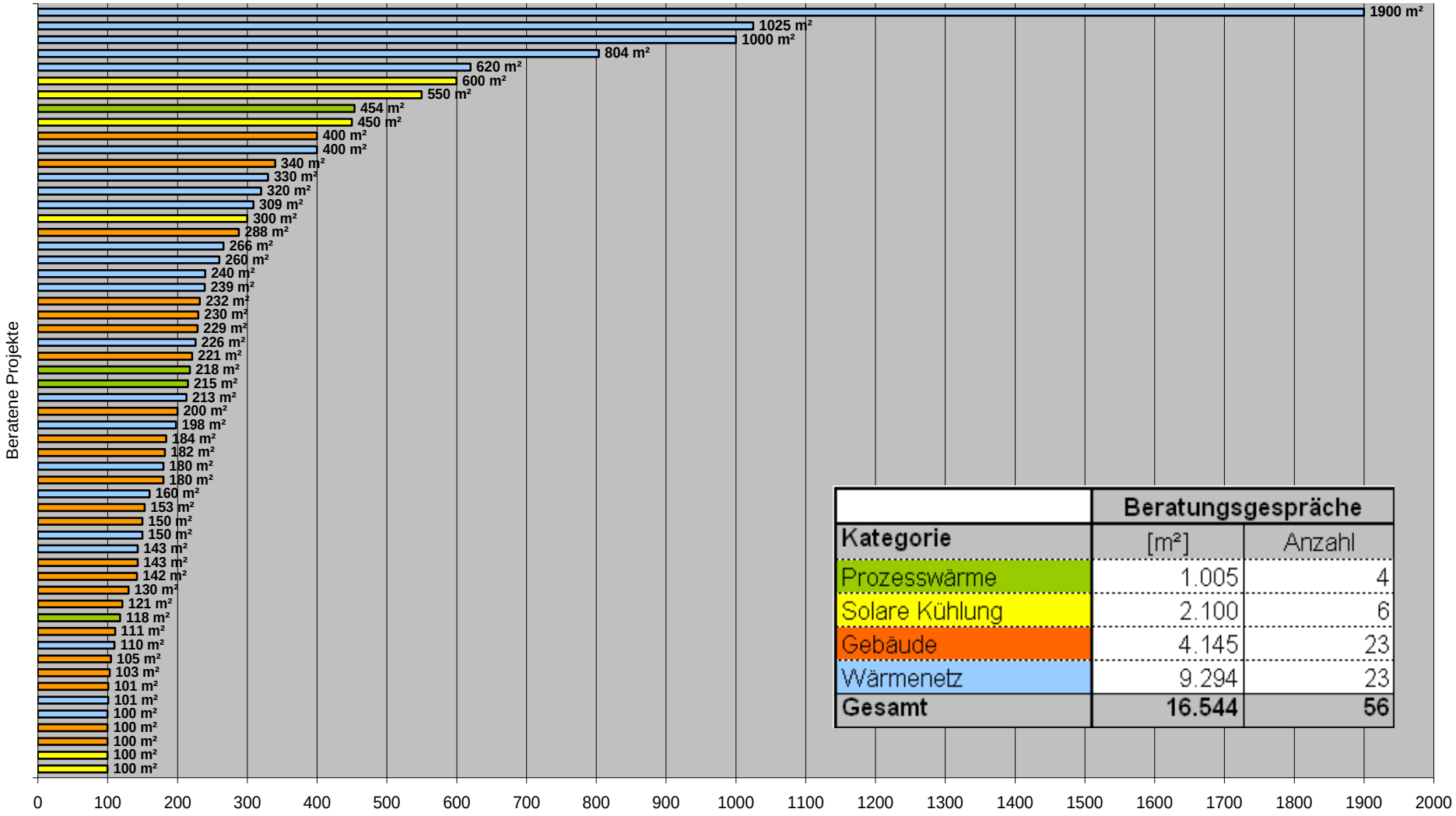

	Beratungsgespräche	
Kategorie	[m²]	Anzahl
Prozesswärme	1.005	4
Solare Kühlung	2.100	6
Gebäude	4.145	23
Wärmenetz	9.294	23
Gesamt	**16.544**	**56**

Examples – Meat Factory Berger

Application: Process heating

Basic data: 1.200 m² gross collector area, 80 m³ Speicher

Status: Project development

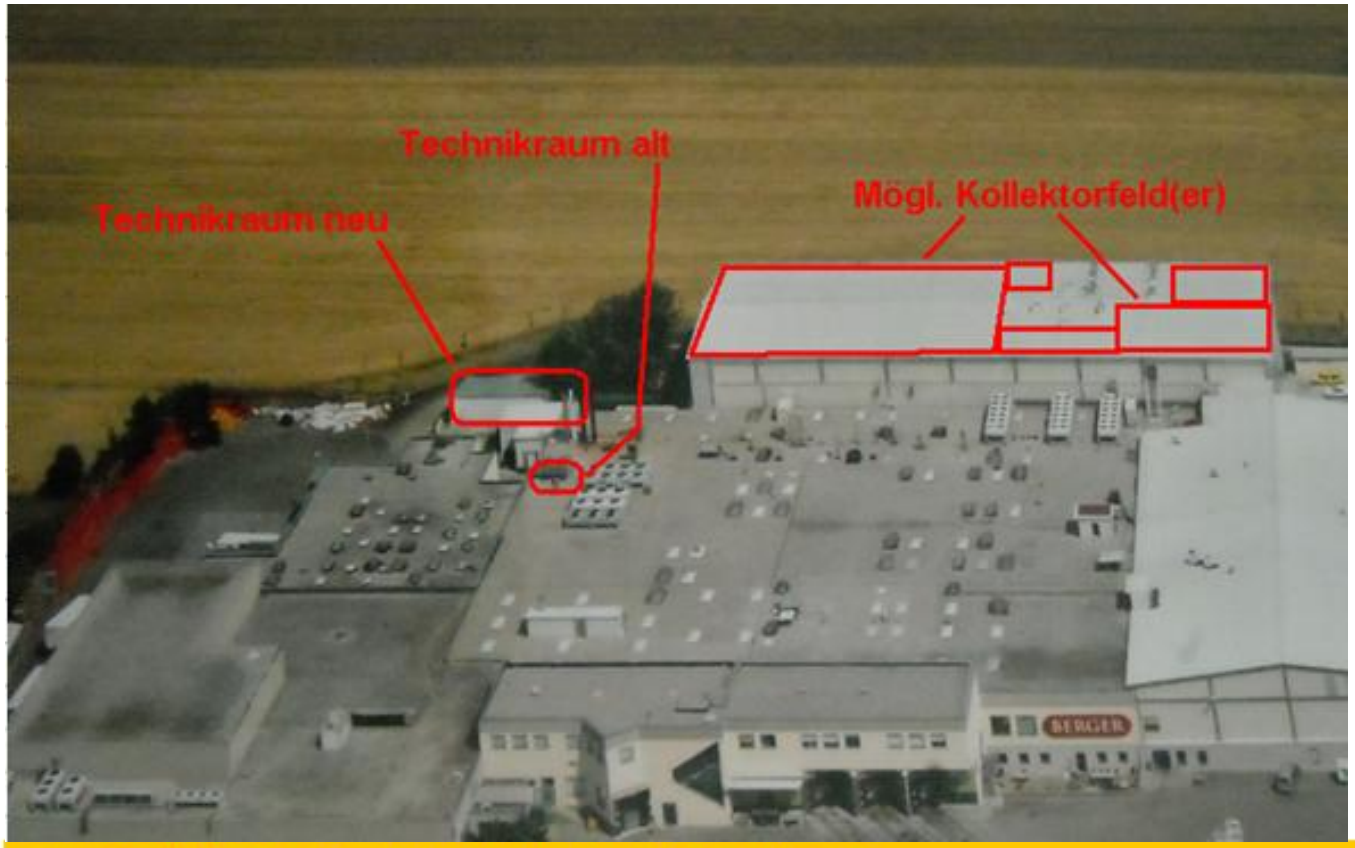

District Heating Plant AEVG, Graz

Application : District heating supply

Basic Data: Upgrade from 4960 m² to 6860 m² gross collector area, without puffer storage

Status: Projektentwicklung

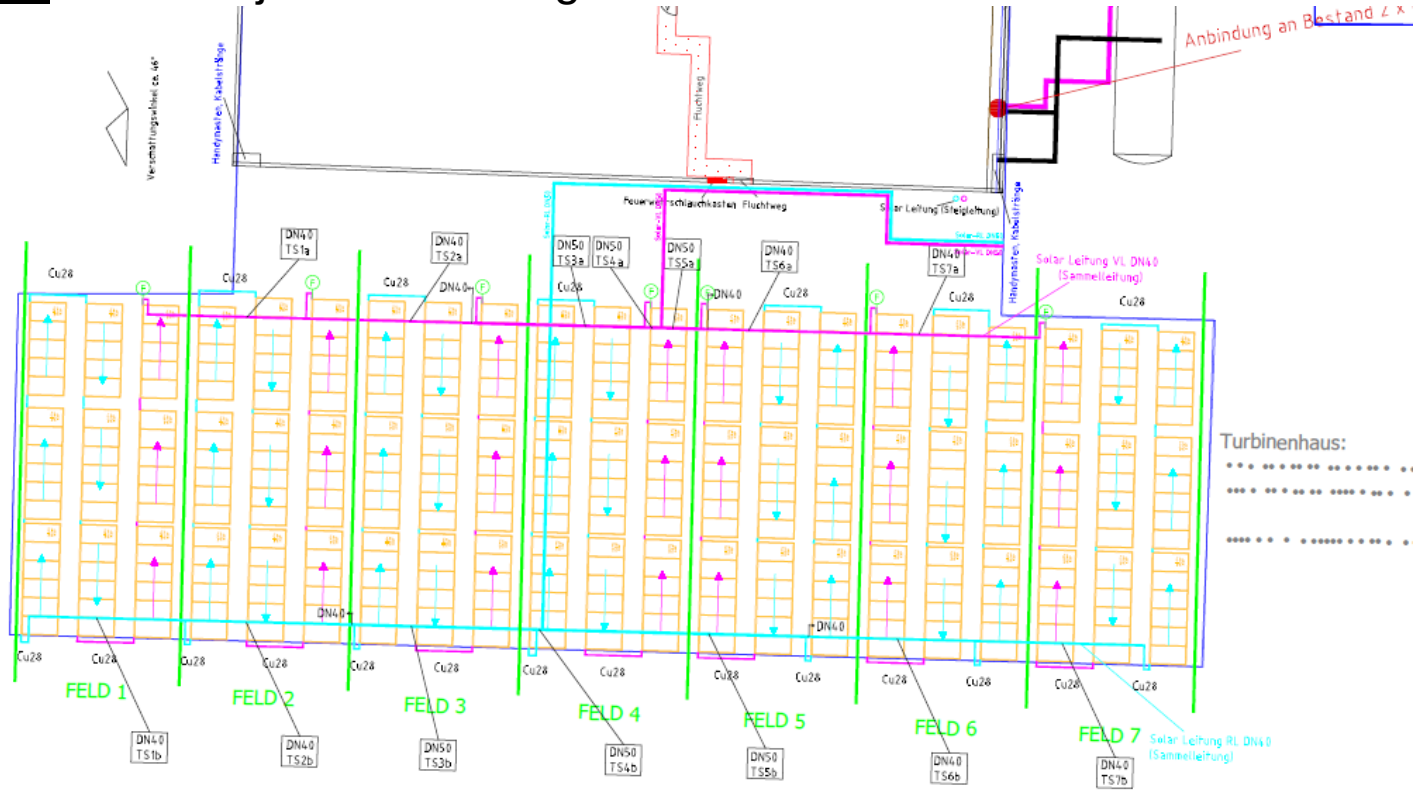

Examples – AVL List, Graz

Application : Solar heating and cooling

Basic data: 1.576 m² gross collector area, 30 m³ puffer storage

Status: Project development

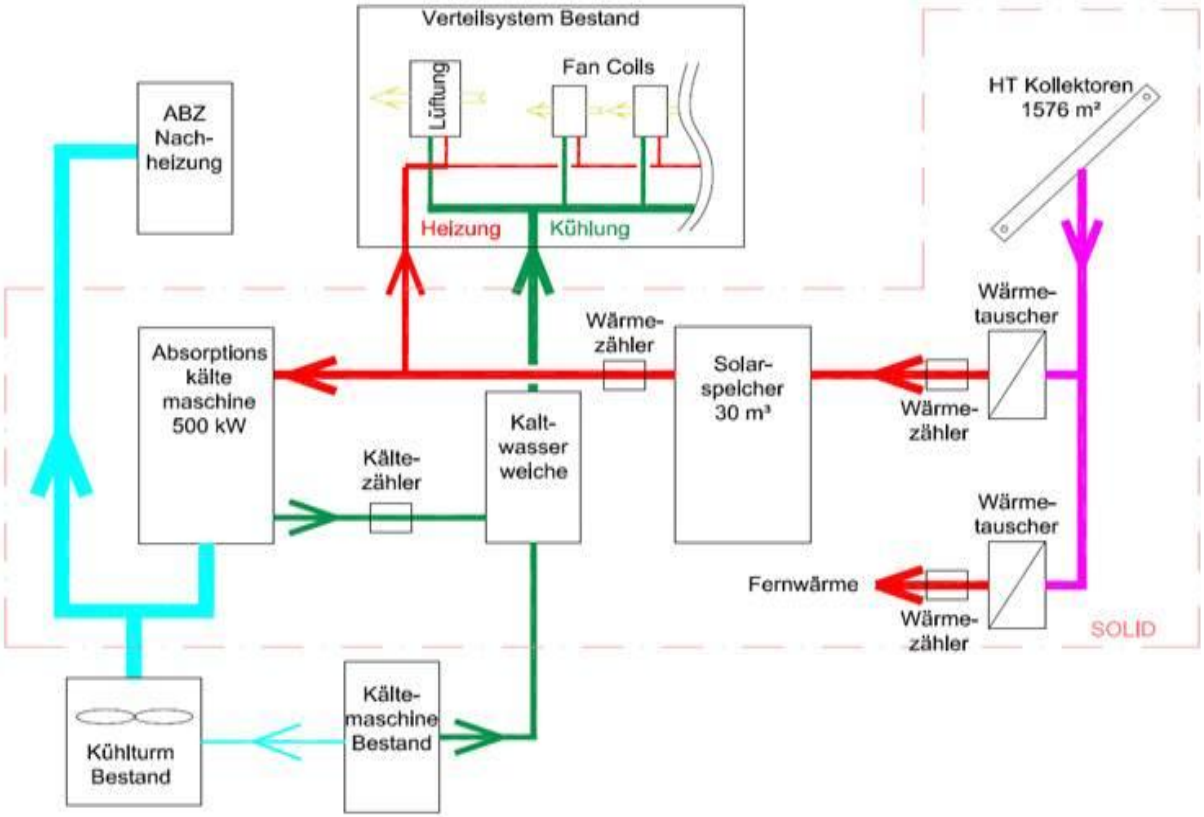

Examples – Salzburg Lehen (Municity Utility Salzburg)

Application : Integration in a new planned district heating for the new area (350 flats, a student hostel, laboratories, office buildings und a hotel will be supplied)

Eckdaten: 2.000 m² gross collector area, 200 m³ puffer storage

Status: Whole project under construction, finnished till summer 2012

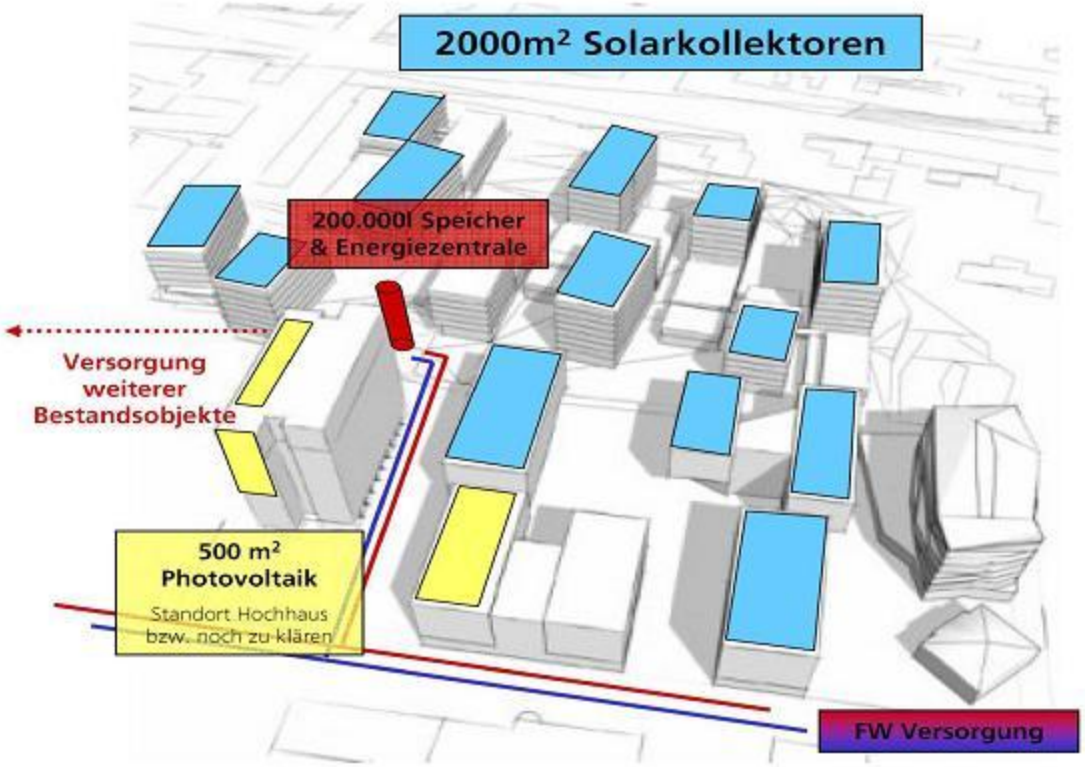

Thank‘s for your attention !